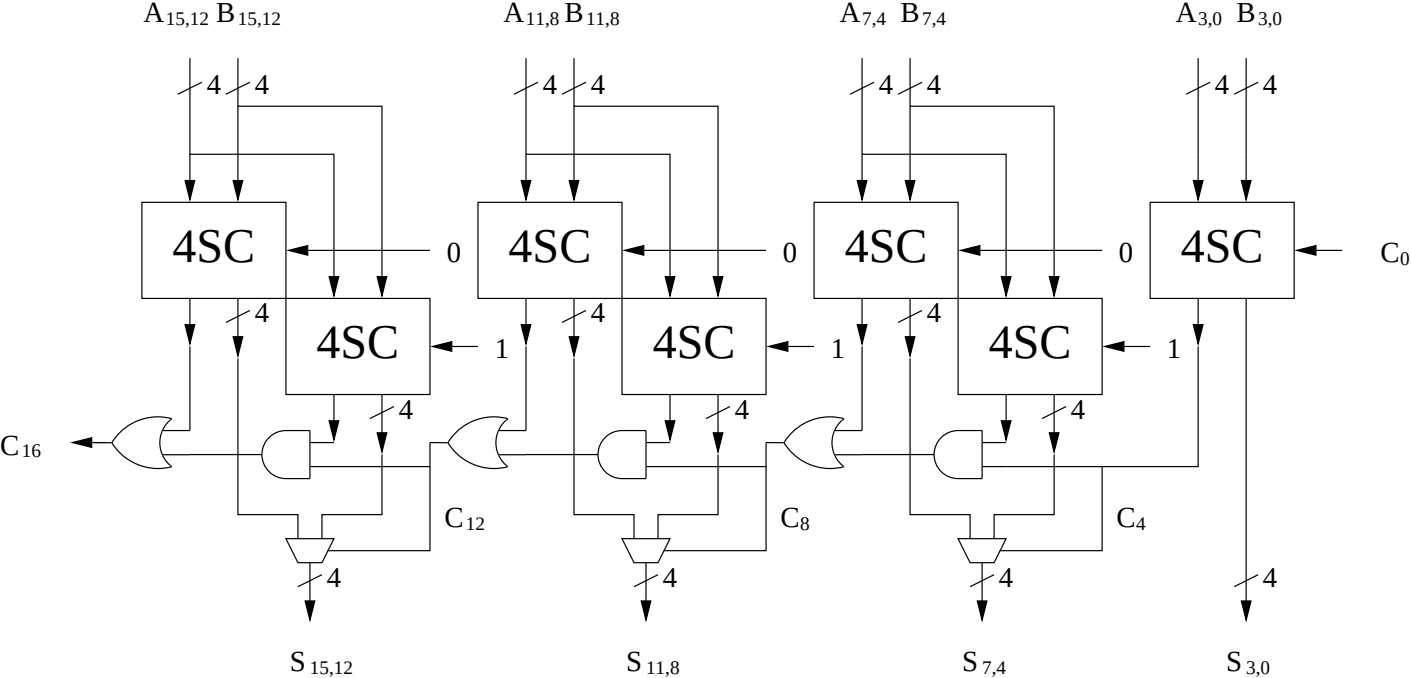
A15,12 B15,12
A11,8 B11,8
A7,4 B7,4
A3,0 B3,0
4
4SC
0
1
C0
C16
C12
C8
C4
S15,12
S11,8
S7,4
S3,0