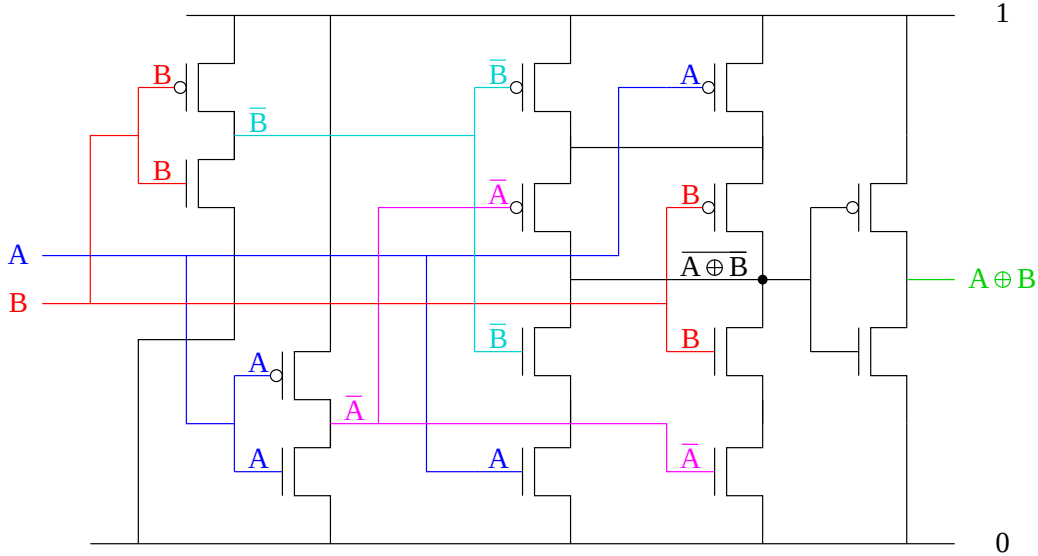
1
B
$\overline{B}$
B
$\overline{B}$
A
$\overline{A}$
B
A
B
$\overline{A \oplus B}$
A ⊕ B
$\overline{B}$
B
A
$\overline{A}$
A
A
$\overline{A}$
0

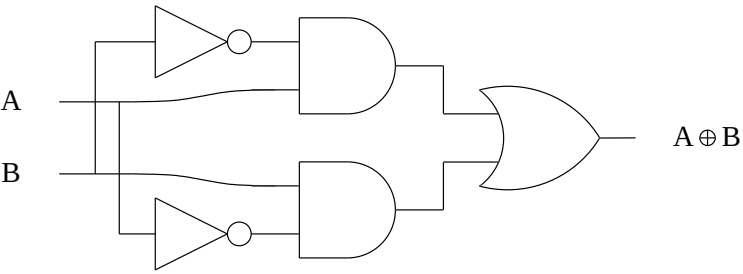
A
B
A ⊕ B

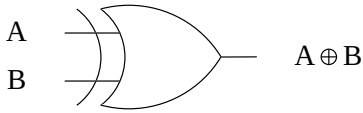
A
B
A ⊕ B

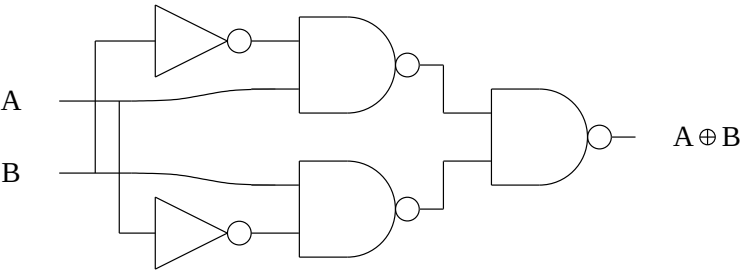
A
B
A ⊕ B