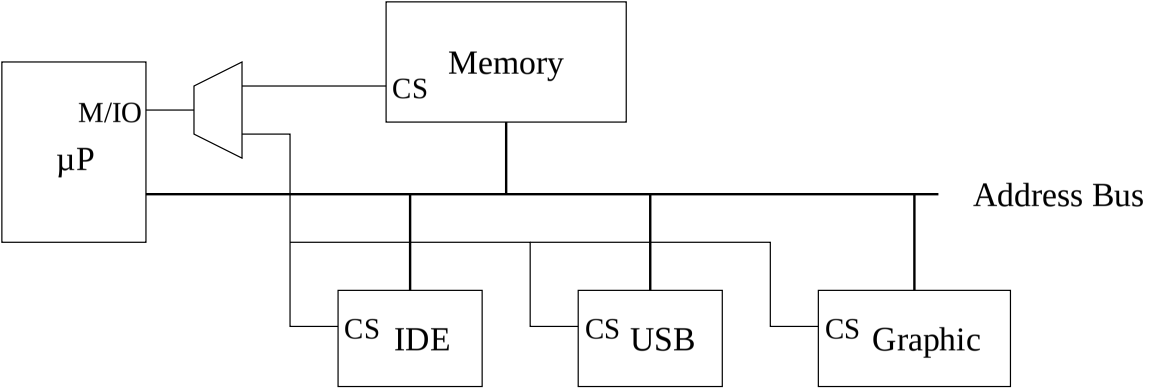
Memory
CS
M/IO
µP
Address Bus
CS
IDE
CS
USB
CS
Graphic